# Wall mount bracket indoor/outdoor

NVB-6080WB



## DIMENSIONS

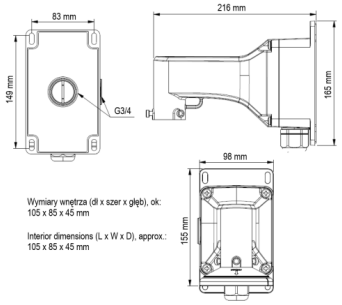


| | |
|---|---|
| Type | wall mount adapter, indoor/outdoor |
| Application | 6000 series IP cameras (using one of conversion adapters: NVB-6081CAP, NVB-6082CAP or NVB-6083CAP). A detailed list of compatible cameras and other products is available on the website, in the file in the "Downloadable Files" tab |
| Material | aluminium |
| Color | white |
| Load Capacity | 5 kg |
| Dimensions (mm) | 98 (W) x 165 (H) x 216 (L) |
| Weight | 0.9 kg |